NATIONAL RADIO ASTRONOMY OBSERVATORY
Green Bank, West Virginia

Electronics Division Internal Report No. 96

A DOUBLE-SWITCHED WATER VAPOR RADIOMETER

James L. Dolan

OCTOBER 1970

NUMBER OF COPIES: 100

A DOUBLE-SWITCHED WATER VAPOR RADIOMETER

James L. Dolan

Introduction

This report should be associated with Electronics Division Internal Report No. 89, "General Description and Operating Instructions for the Water Vapor Receiver". The radiometer described in report No. 89 has been considerably modified, the most significant modification being the addition of a second synchronous detector (described later). The original water vapor unit was placed in operation approximately one year ago (fall of 1969). The data collected thus far has been analyzed by B. A. Manchester and J. W. Waters. (See the progress reports that have been issued.)

Local Oscillator Frequencies

The Gunn effect devices currently in use as local oscillators have given some trouble, particularly in switching (or pulsed) mode. It is difficult to find two frequencies at which both oscillators in both units turn on and off reliably. The oscillators are now operating as follows:

High position $\approx$ 22.8 GHz

Low position $\approx$ 20.4 GHz

The respective oscillators in each unit are set as nearly as possible to the same frequency to avoid cross-coupling by placing the local oscillator within the 40 MHz dead-band centered on the local oscillator frequency.

Thermal calibrations were run on September 4, 1970 for each unit and each frequency. Results were as follows:

Unit 1	Low frequency....cal	= 67.5°
	High frequency....cal	= 72°
Unit 2	Low frequency....cal	= 70.5°
	High frequency....cal	= 66.5°

Modifications

After considerable data reduction and attempts to correlate the interferometer phase changes with the measured water vapor, it became obvious that a method to separate water vapor line emission from condensed water continuum radiation was needed. A method of doing this was devised by Dr. S. Weinreb. Simply, it consists of a radiometer that is simultaneously load and frequency switched. The front-end (Dicke) switch is driven at F_1 (presently about 50 Hz) and switches from the antenna to a comparison termination (load switched). Synchronous detector number 1 is also driven at the same switch rate, F_1. Theoretically, synchronous detector number 1 will not respond to continuum radiation. The local oscillator is switched from F Low to F High at switch rate F_2 (presently $\simeq$ 2 Hz). The switched output from synchronous detector number 1 is routed to synchronous detector number 2, where it is synchronously detected at 2 Hz. We have defined 22.8 GHz (High LO) as signal, and 20.4 (Low LO) as comparison. The output of synchronous detector number 2 can be:

1) signal - comparison
2) signal + comparison
3) signal
4) comparison.

We are presently monitoring signal - comparison, and comparison, although this may change in the future. Aside from some minor instrumental problems, the systems are performing as planned.

Operating Procedure Changes

Reference frequency ..... Normally set to 50 Hz. Controls only Dicke switch and synchronous detector number 1. The local oscillators and synchronous detector number 2 are driven $\approx$ 2 Hz. No external adjustment is possible.

Operating Procedure Changes (continued):

Dicke switch ..... Previously set to "Sig" — now should be set to "Mod".

Circuit Additions

In addition to the second synchronous detector, a total power DC back-off-times-ten amplifier was added between the total power monitor front panel and rear panel. This allows total power at the rear panel only to be backed off to ϕ and ΔV to be amplified ten times. (See drawing number S2. 502-12.)

CABLE NUMBER 18-19-20-21 TYPE 15 Twisted Pair No. 18

Color Code Per Pair	Color Code	Pin No.	Remarks	
Blue Tracer	Red	A-1	+15	
	Yellow	B-2	Common	
	Shield	E		
Purple Tracer.....	Red	C-3	-15	
	Yellow	D-4	Common	
	Shield	J		
Gray Tracer	Red	O-5	+28	
	Yellow	P-6	Common	
	Shield	H		
Green Tracer	Red	F-7)	Thermistor	(Blue)
	Yellow	G-8)	Control	(White)
	Shield	M		
Yellow Tracer	Red	T-9)	Audio	(Blue)
	Yellow	U-10)		(White)
	Shield	N		
Center Pair, No Tracer	Gray	K-11	Noise	(K - Red, 11- White)
	Yellow	L-12	Tube	(L - Black, 12-Red)
	Shield	R		
Center Pair, No Tracer	Blue	X-13	Ferrite Sw.	(Gray)
	Yellow	Y-14	Drive	(Red)
	Shield	Q		
Center Pair, No Tracer	Gray	Z-15)	Op Amp	(Green) (N.T.
	Red	a-16)	Cal Sig - 7	(Yellow) Attn.)
	Shield	S		
Center Pair, No Tracer	Red	V-17	LO Sig (Card 3)	(Blue)
	Yellow	W-18	(Switch)	(White)
	Shield	d		
Black Tracer	Red	m-19	Det Sig (Card 2)	(Orange)
	Yellow	n-20		(Black)
	Shield	e		
Orange Tracer	Red	b-21	Xtal Curr	(Yellow)
	Yellow	c-22	No. 1	(Black)
	Shield	k		
Red Tracer	Red	r-23	Xtal Curr	(Blue)
	Yellow	s-24	No. 2	(Black)
	Shield	x		
Brown Tracer	Red	t-25	Spare	
	Yellow	u-26		
	Shield	y		
Center Pair, No Tracer	Blue	f-27	LO Atten	(Green)
	Gray	g-28	Current	(Black)
	Shield	p		
Center Pair, No Tracer	Red	h-29	Spare	
	Blue	j-30		
	Shield	q		
Spare Pins (3)		v		
		w		
		z		

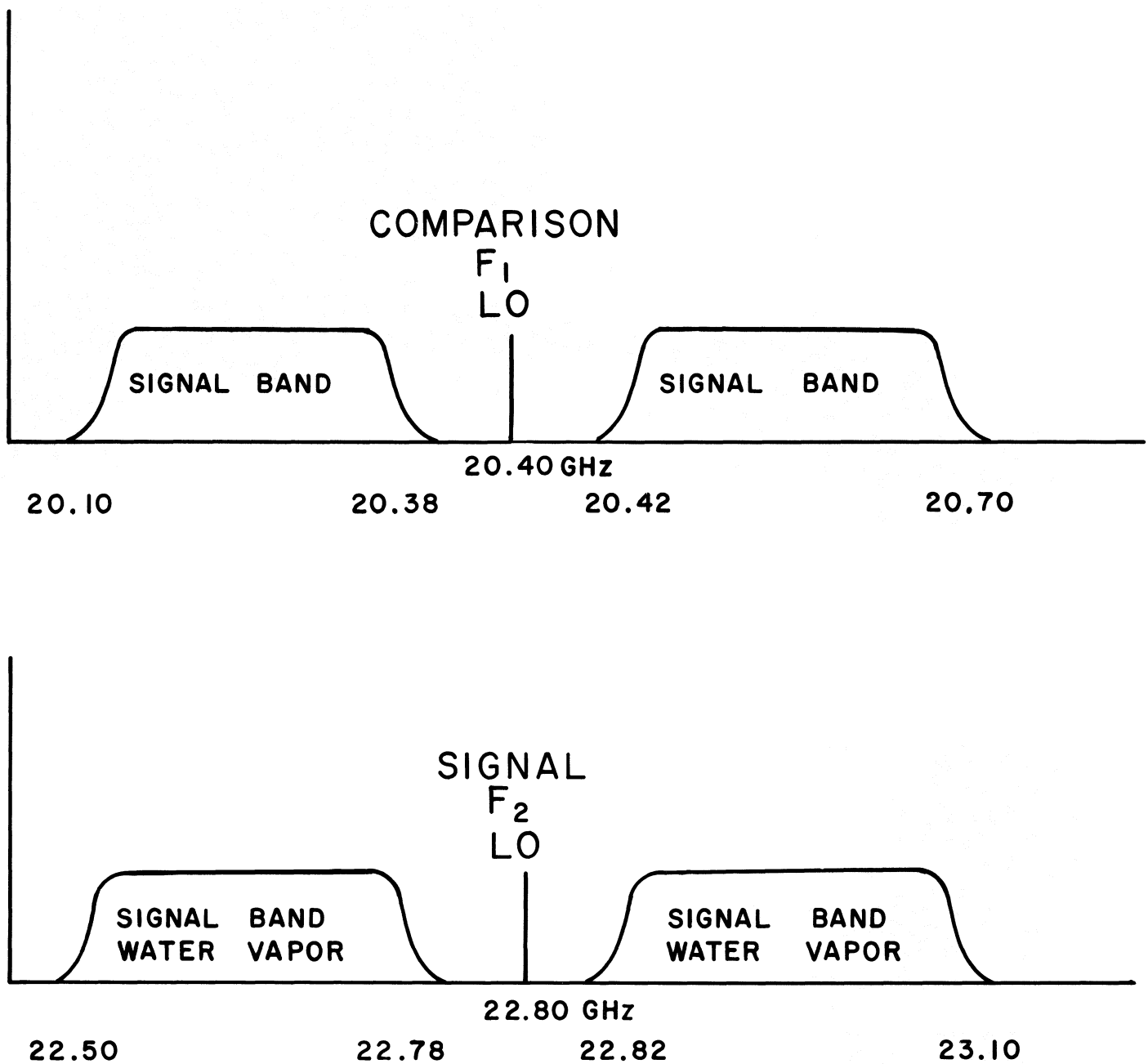

RF SIGNAL BANDS FOR THE
WATER VAPOR RADIOMETERS

FIG. 1

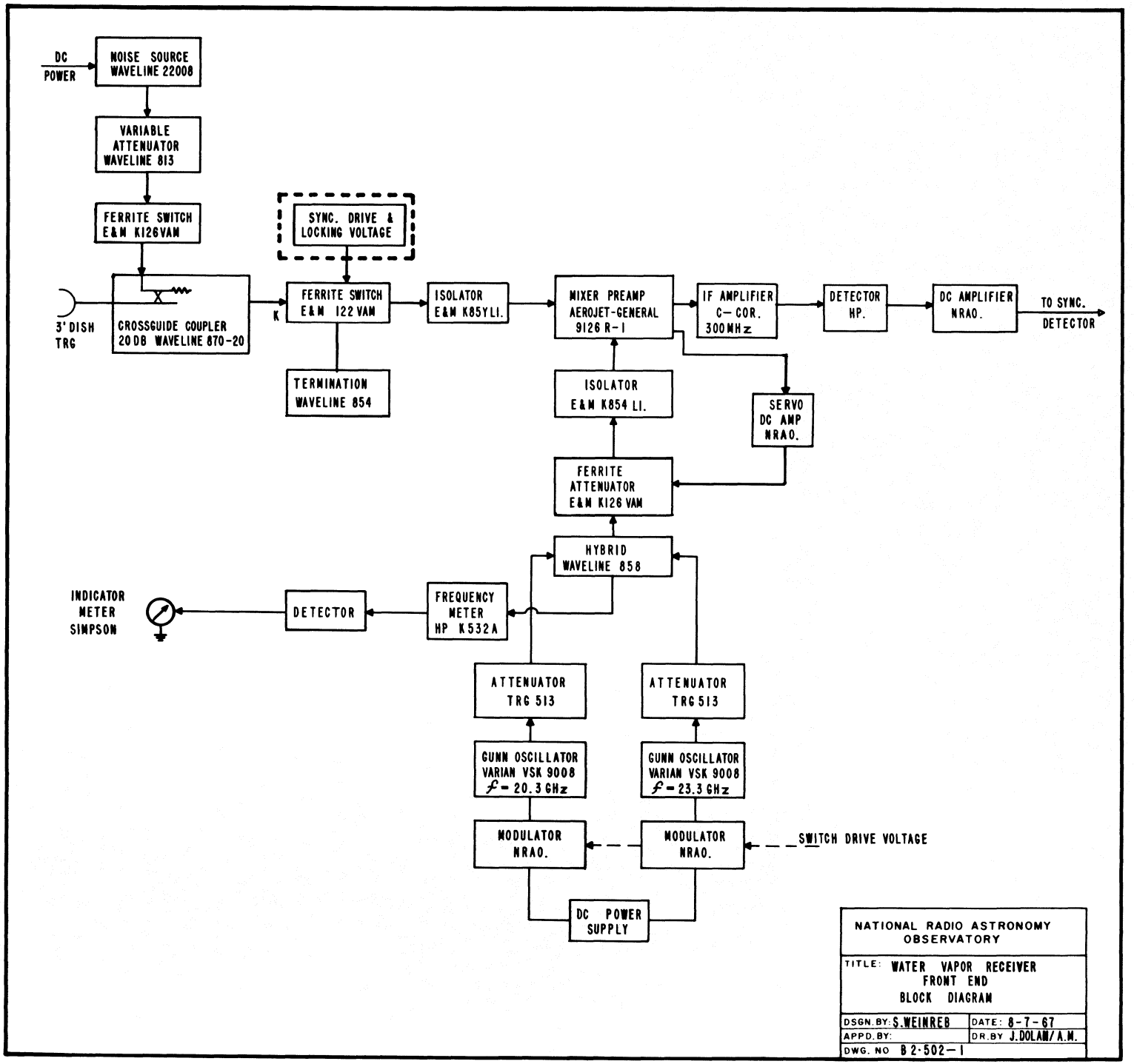
DC POWER
NOISE SOURCE WAVELINE 22008
VARIABLE ATTENUATOR WAVELINE 813
FERRITE SWITCH E&M K126VAM
SYNC. DRIVE & LOCKING VOLTAGE
3' DISH TRG
CROSSGUIDE COUPLER 20 DB WAVELINE 870-20
K
FERRITE SWITCH E&M 122 VAM
TERMINATION WAVELINE 854
ISOLATOR E&M K85YLI.
MIXER PREAMP AEROJET-GENERAL 9126 R-1
IF AMPLIFIER C-COR. 300MHz
DETECTOR HP.
DC AMPLIFIER NRAO.
TO SYNC. DETECTOR
ISOLATOR E&M K854 LI.
SERVO DC AMP NRAO.
FERRITE ATTENUATOR E&M K126 VAM
HYBRID WAVELINE 858
INDICATOR METER SIMPSON
DETECTOR
FREQUENCY METER HP K532A
ATTENUATOR TRG 513
ATTENUATOR TRG 513
GUNN OSCILLATOR VARIAN VSK 9008 f = 20.3 GHz
GUNN OSCILLATOR VARIAN VSK 9008 f = 23.3 GHz
MODULATOR NRAO.
MODULATOR NRAO.
SWITCH DRIVE VOLTAGE
DC POWER SUPPLY
NATIONAL RADIO ASTRONOMY OBSERVATORY
TITLE: WATER VAPOR RECEIVER FRONT END BLOCK DIAGRAM
DSGN. BY: S. WEINREB
DATE: 8-7-67
APPD. BY:
DR. BY J. DOLAN/A.M.
DWG. NO B2-502-1

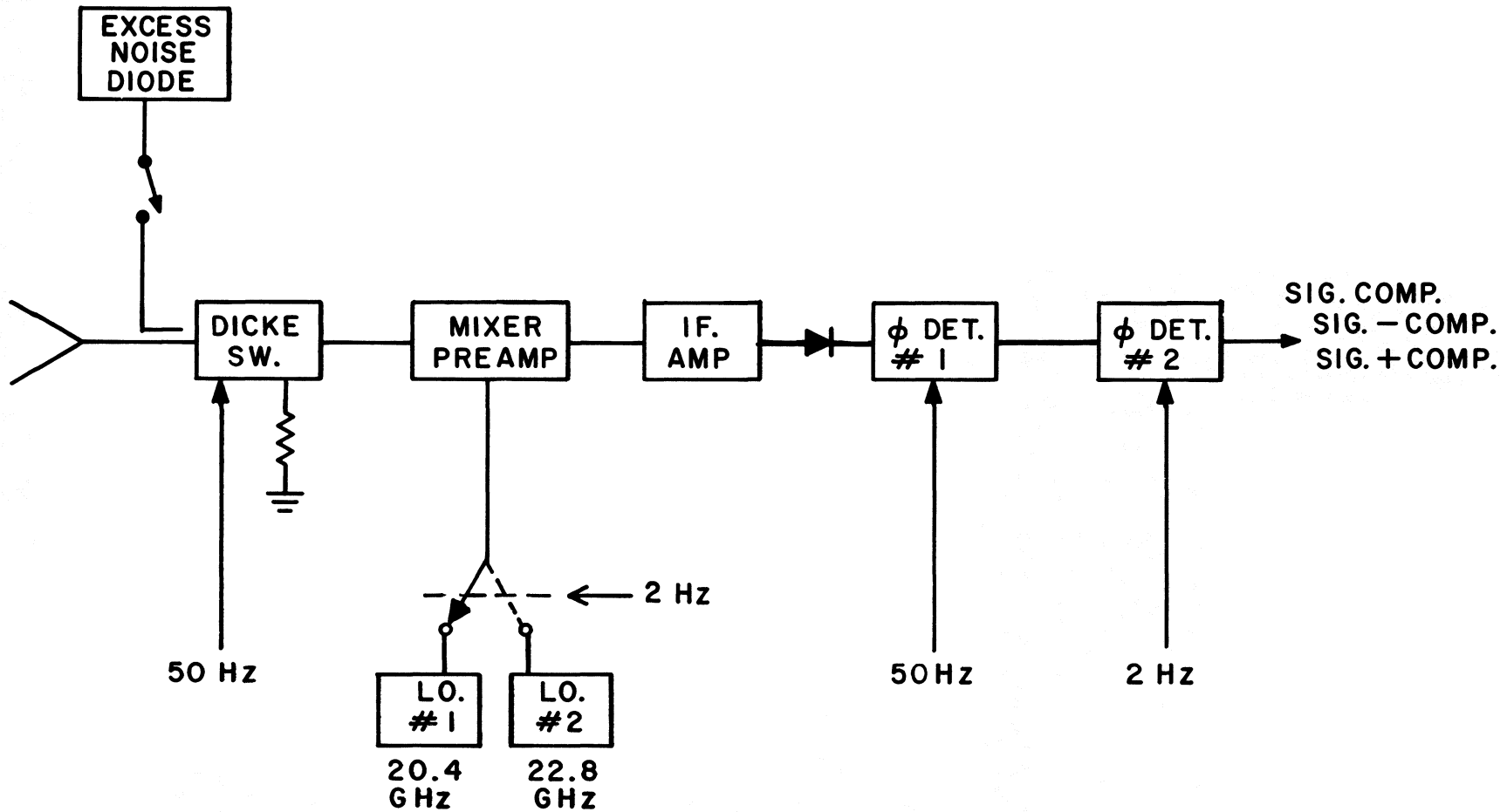

DOUBLE SWITCHED WATER VAPOR RADIOMETER
SIMPLIFIED BLOCK DIAGRAM

FIG. 2

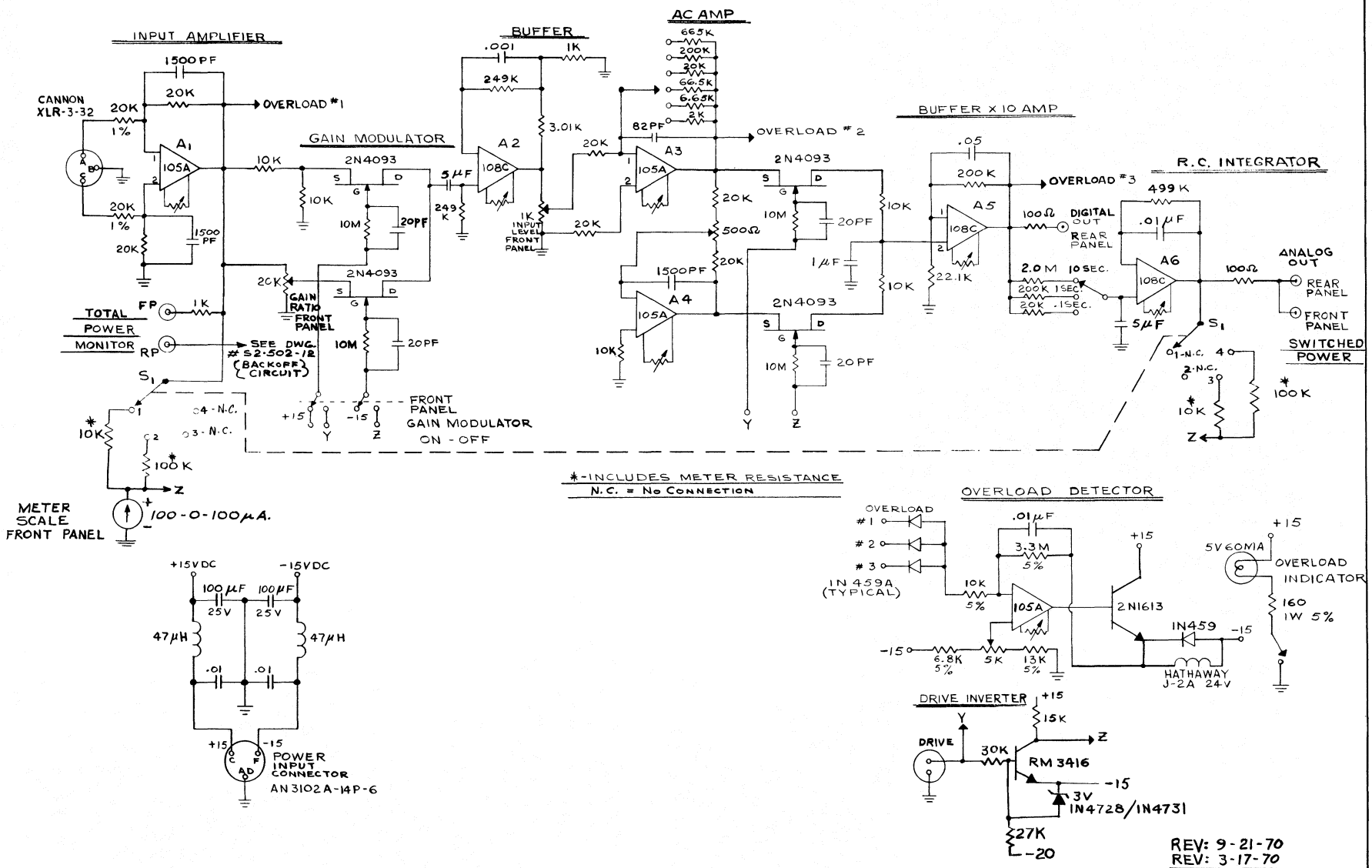

REV: 9-21-70
REV: 3-17-70

NATIONAL RADIO ASTRONOMY OBSERVATORY

TITLE: WATER VAPOR SYNCHRONOUS-DETECTOR

DSGN. BY: J. DOLAN	DATE: 10-27-69
APP.D. BY: J. DOLAN	DR. BY: A.J.M.
DWG. NO. S2-502-2	

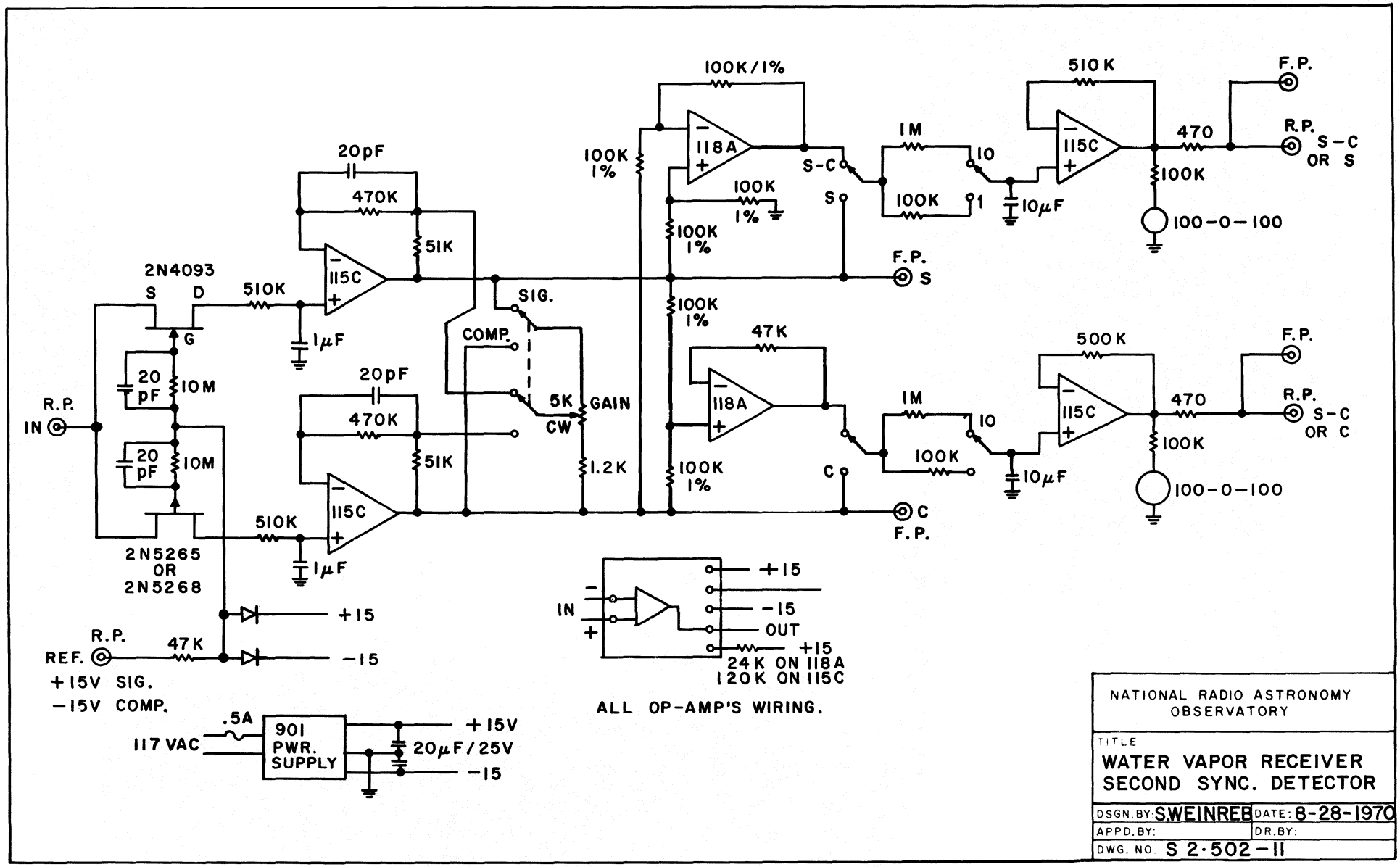

NATIONAL RADIO ASTRONOMY OBSERVATORY

TITLE
WATER VAPOR RECEIVER
SECOND SYNC. DETECTOR

DSGN. BY: S. WEINREB	DATE: 8-28-1970
APPD. BY:	DR. BY:
DWG. NO. S 2·502-11	

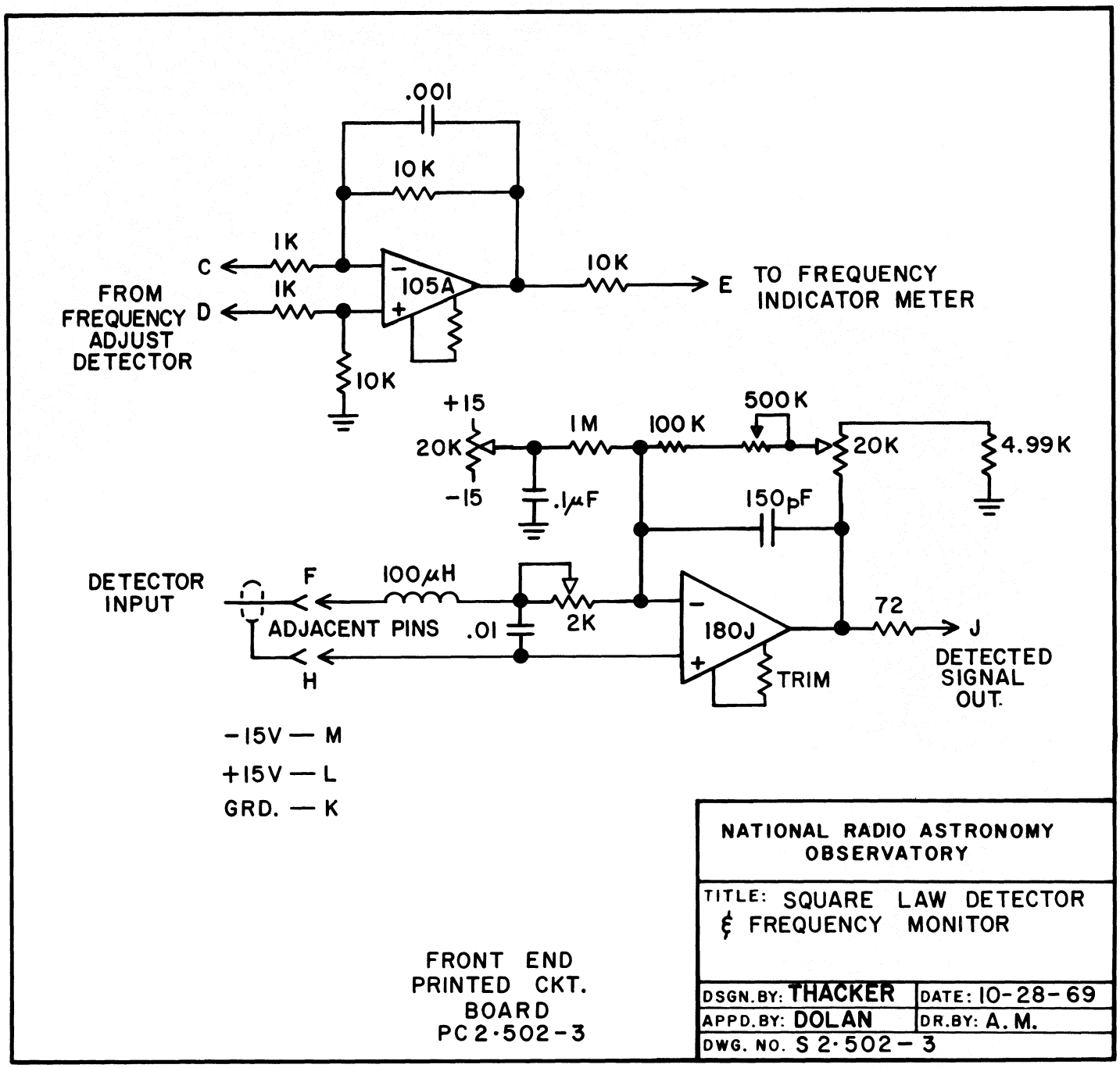
.001
10K
1K
C
1K
D
FROM FREQUENCY ADJUST DETECTOR
105A
10K
10K
E
TO FREQUENCY INDICATOR METER
10K
+15
20K
-15
1M
100K
500K
20K
4.99K
.1μF
150pF
DETECTOR INPUT
F
100μH
ADJACENT PINS
.01
2K
H
180J
TRIM
72
J
DETECTED SIGNAL OUT.
-15V — M
+15V — L
GRD. — K
NATIONAL RADIO ASTRONOMY OBSERVATORY
TITLE: SQUARE LAW DETECTOR & FREQUENCY MONITOR
DSGN. BY: THACKER
DATE: 10-28-69
APPD. BY: DOLAN
DR. BY: A. M.
DWG. NO. S 2·502-3
FRONT END PRINTED CKT. BOARD PC 2·502-3

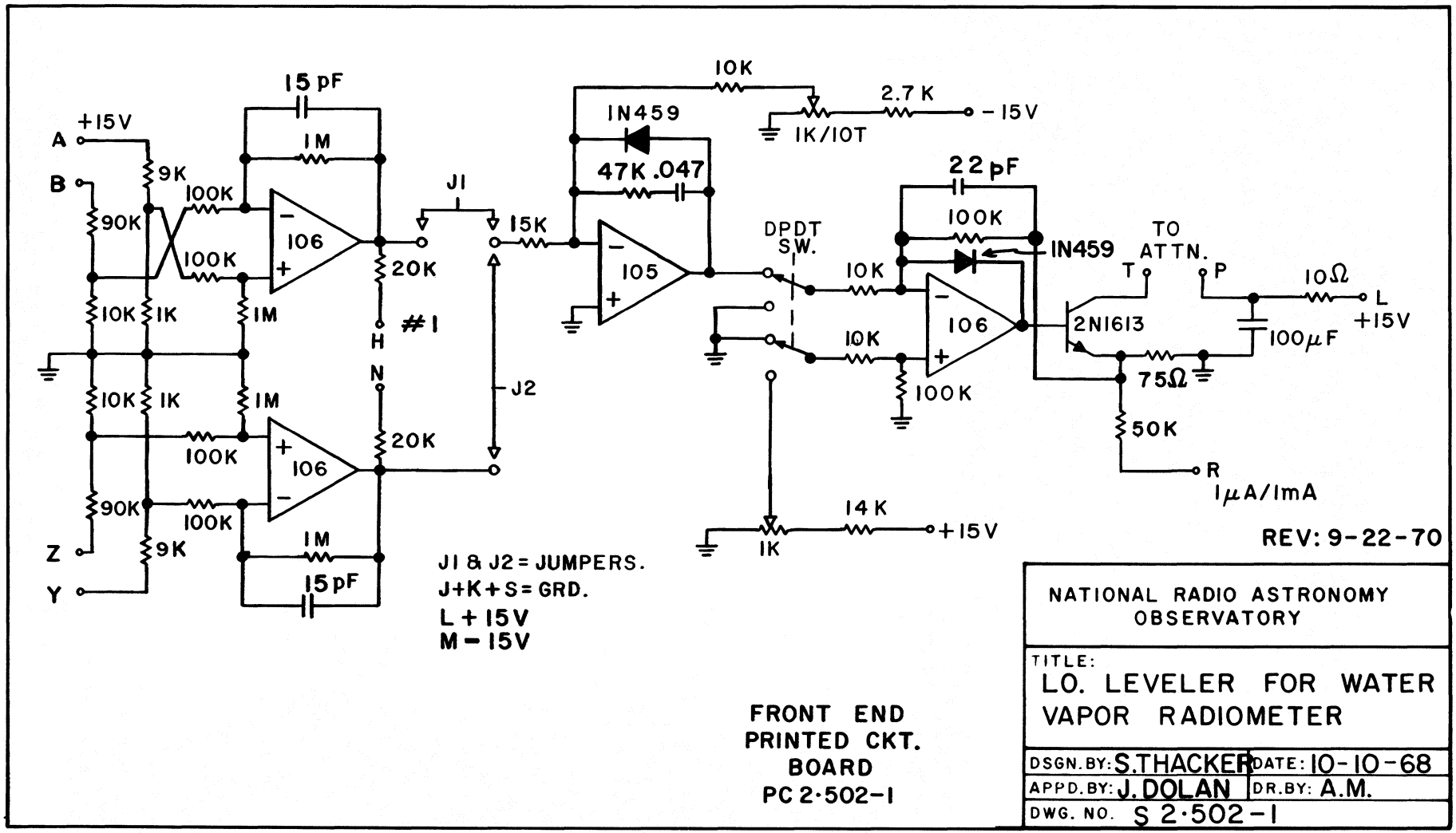
+15V
A
B
Z
Y
9K
90K
10K
1K
100K
1M
15 pF
106
20K
H
N
#1
J1
J2
15K
IN459
47K .047
105
10K
2.7 K
-15V
1K/10T
DPDT SW.
22 pF
IN459
TO ATTN.
T
P
2N1613
10Ω
L
+15V
100μF
75Ω
50K
R
1μA/1mA
14 K
1K
J1 & J2 = JUMPERS.
J+K+S = GRD.
L + 15V
M − 15V
REV: 9-22-70
FRONT END
PRINTED CKT.
BOARD
PC 2·502-1
NATIONAL RADIO ASTRONOMY OBSERVATORY
TITLE:
LO. LEVELER FOR WATER VAPOR RADIOMETER
DSGN. BY: S.THACKER
DATE: 10-10-68
APPD. BY: J. DOLAN
DR. BY: A.M.
DWG. NO. S 2·502-1

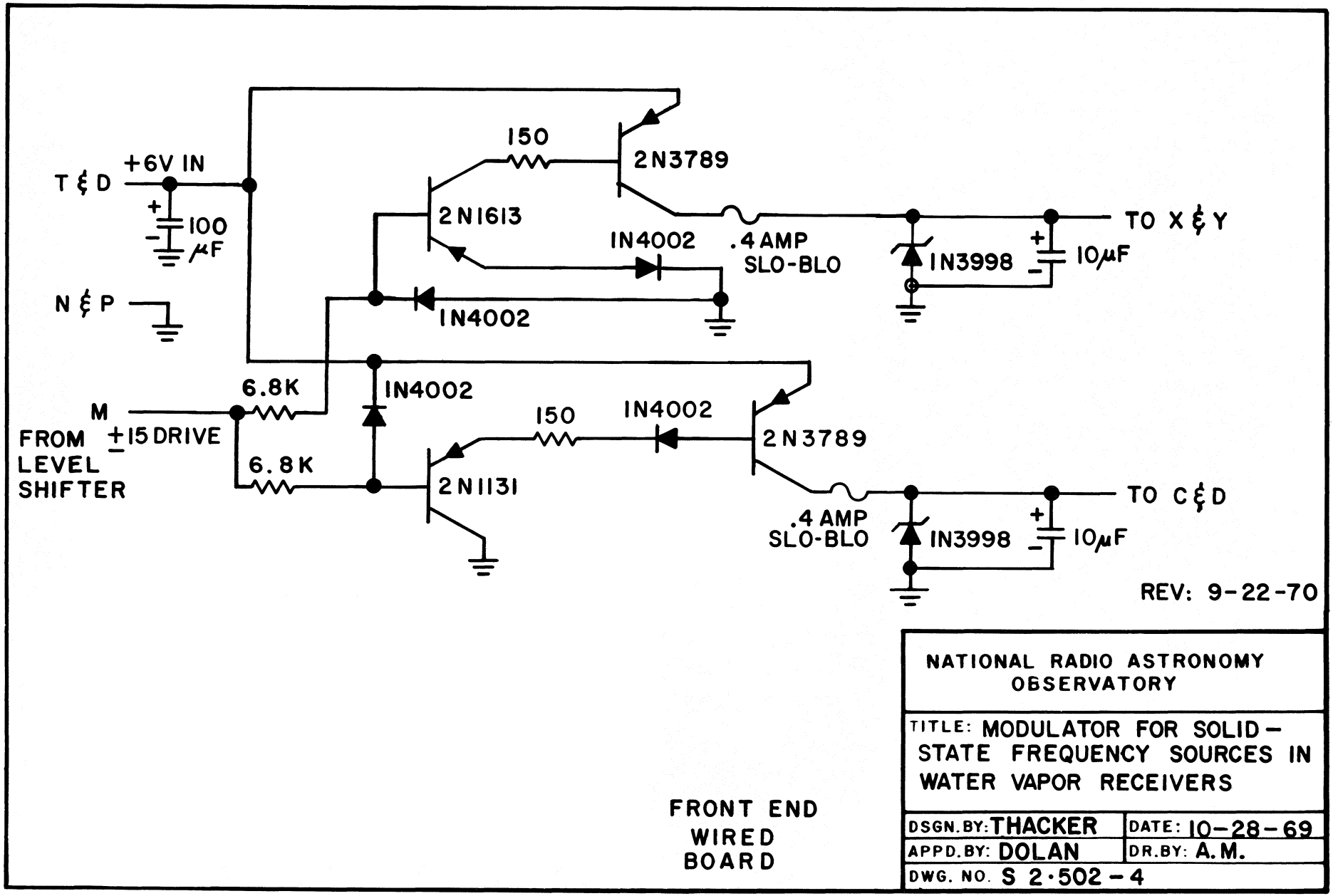
T & D
+6V IN
100 μF
N & P
M
FROM LEVEL SHIFTER
±15 DRIVE
6.8K
6.8K
IN4002
2N1613
150
2N3789
IN4002
IN4002
.4 AMP SLO-BLO
IN3998
10μF
TO X & Y
2N1131
150
IN4002
2N3789
.4 AMP SLO-BLO
IN3998
10μF
TO C & D
REV: 9-22-70
FRONT END WIRED BOARD
NATIONAL RADIO ASTRONOMY OBSERVATORY
TITLE: MODULATOR FOR SOLID-STATE FREQUENCY SOURCES IN WATER VAPOR RECEIVERS
DSGN. BY: THACKER
DATE: 10-28-69
APPD. BY: DOLAN
DR. BY: A.M.
DWG. NO. S 2·502-4

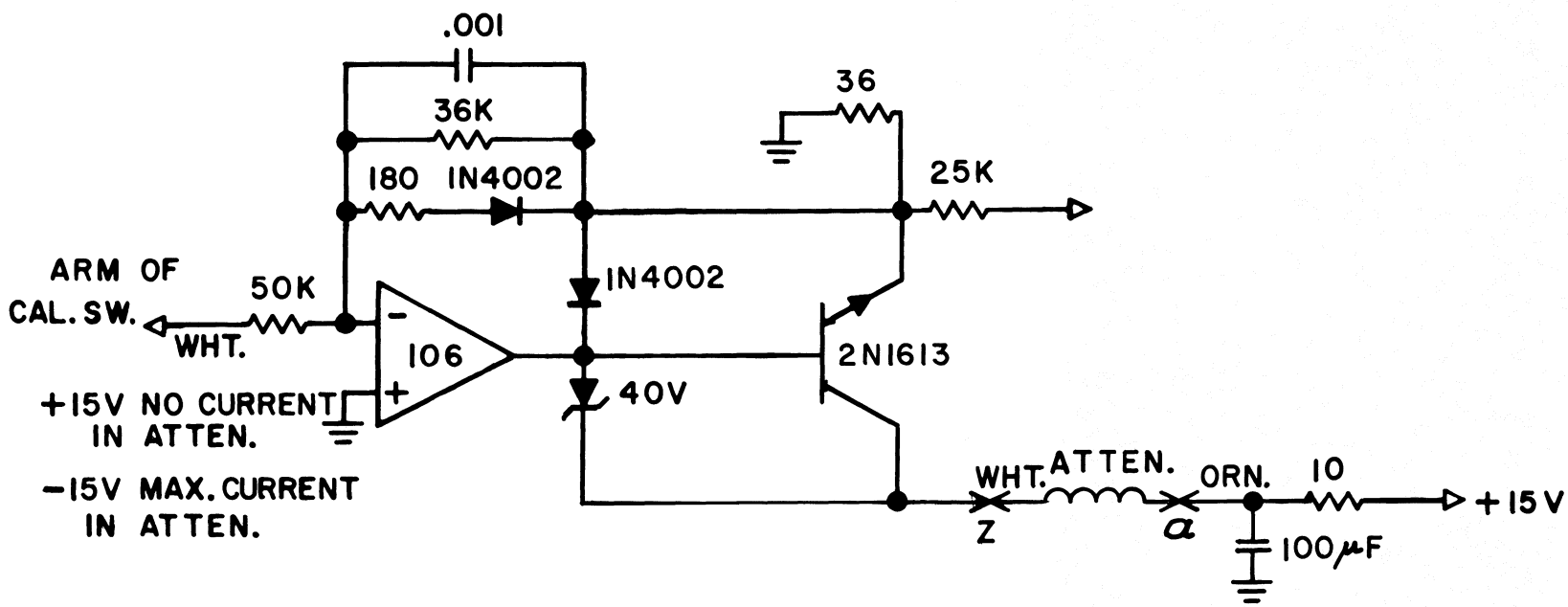

WIRED BOARD

NATIONAL RADIO ASTRONOMY OBSERVATORY	
TITLE: H_2O RADIOMETER CAL. SW. (ATTEN.) DRIVER (BACK END CIRCUIT)	
DSGN. BY: THACKER	DATE: 10-28-69
APPD. BY: DOLAN	DR. BY: A.M.
DWG. NO. S 2·502-5	

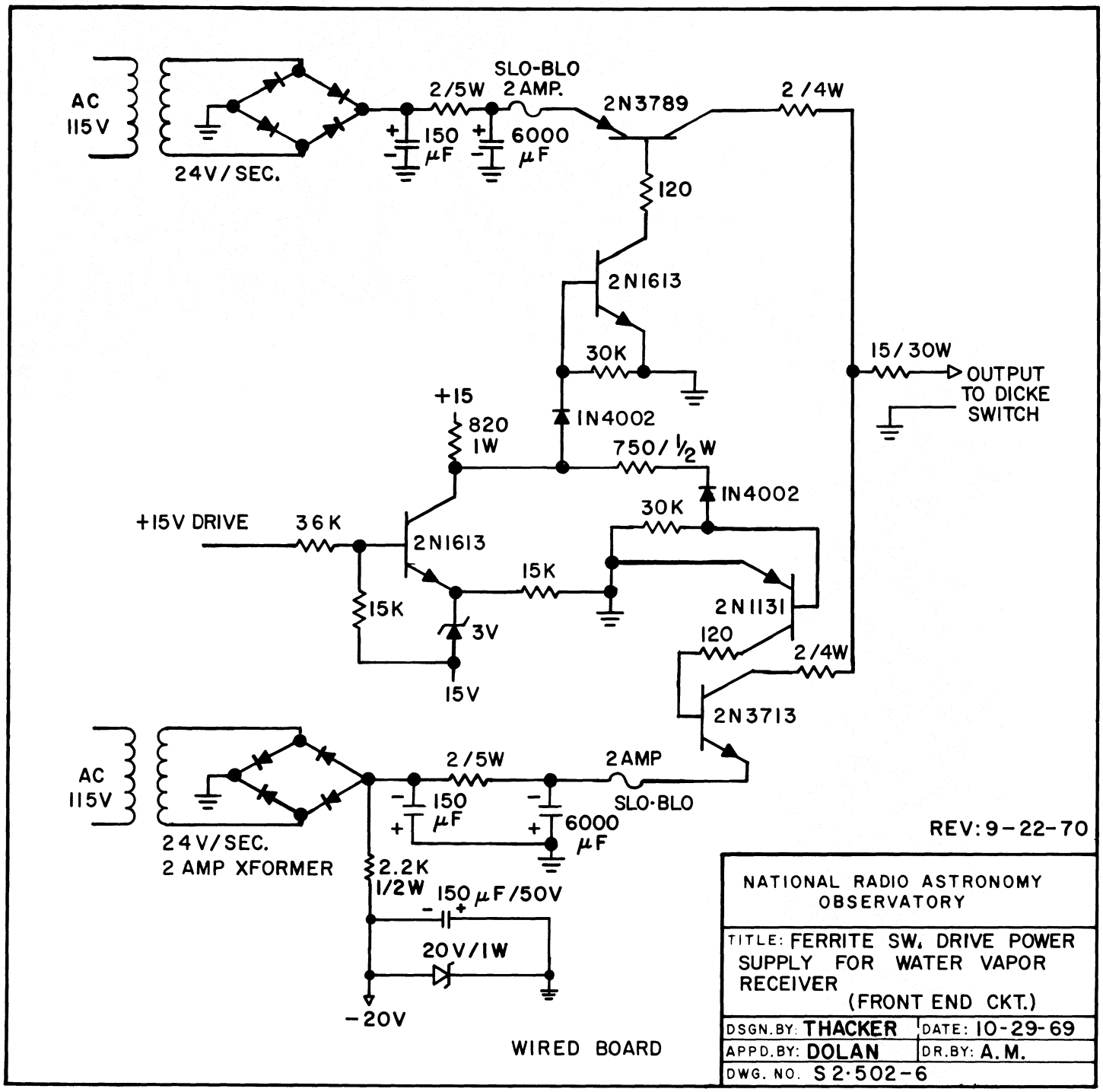
AC
115V
24V/SEC.
2/5W
SLO-BLO
2 AMP.
150
μF
6000
μF
2N3789
2/4W
120
2N1613
30K
15/30W
OUTPUT
TO DICKE
SWITCH
+15
820
1W
1N4002
750/½W
1N4002
30K
+15V DRIVE
36K
2N1613
15K
15K
3V
15V
2N1131
120
2/4W
2N3713
AC
115V
24V/SEC.
2 AMP XFORMER
2/5W
2AMP
SLO-BLO
150
μF
6000
μF
2.2K
1/2W
150 μF/50V
20V/1W
-20V
WIRED BOARD
REV: 9-22-70
NATIONAL RADIO ASTRONOMY
OBSERVATORY
TITLE: FERRITE SW. DRIVE POWER
SUPPLY FOR WATER VAPOR
RECEIVER
(FRONT END CKT.)
DSGN. BY: THACKER
DATE: 10-29-69
APPD. BY: DOLAN
DR. BY: A.M.
DWG. NO. S2-502-6

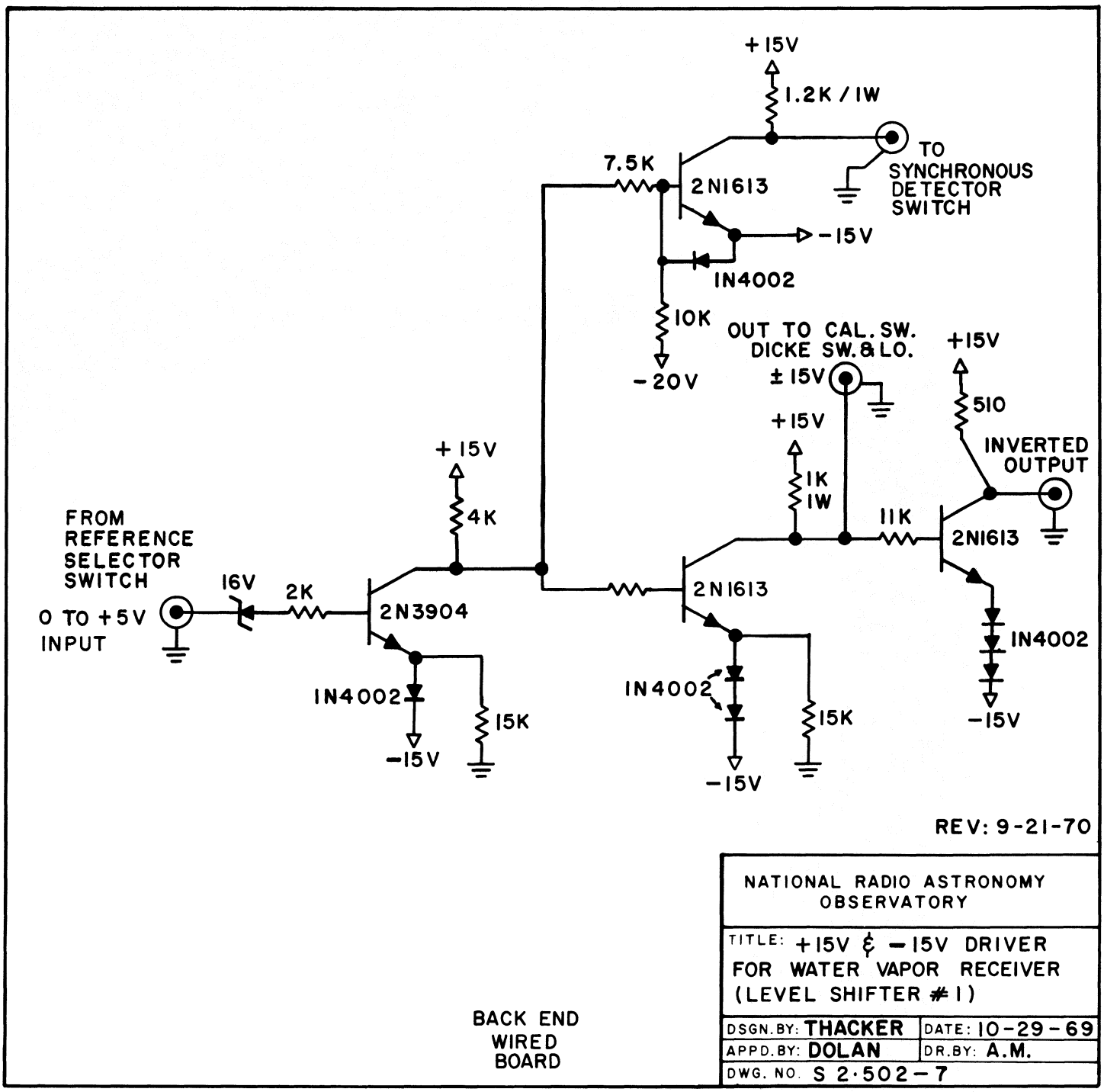
+15V
1.2K / 1W
TO SYNCHRONOUS DETECTOR SWITCH
7.5K
2N1613
-15V
IN4002
10K
-20V
OUT TO CAL. SW. DICKE SW. & LO.
±15V
+15V
510
INVERTED OUTPUT
+15V
1K 1W
11K
2N1613
+15V
4K
FROM REFERENCE SELECTOR SWITCH
0 TO +5V INPUT
16V
2K
2N3904
2N1613
IN4002
IN4002
15K
-15V
15K
-15V
IN4002
-15V
REV: 9-21-70
NATIONAL RADIO ASTRONOMY OBSERVATORY
TITLE: +15V & -15V DRIVER FOR WATER VAPOR RECEIVER (LEVEL SHIFTER #1)
DSGN. BY: THACKER
DATE: 10-29-69
APPD. BY: DOLAN
DR. BY: A.M.
DWG. NO. S 2·502-7
BACK END WIRED BOARD

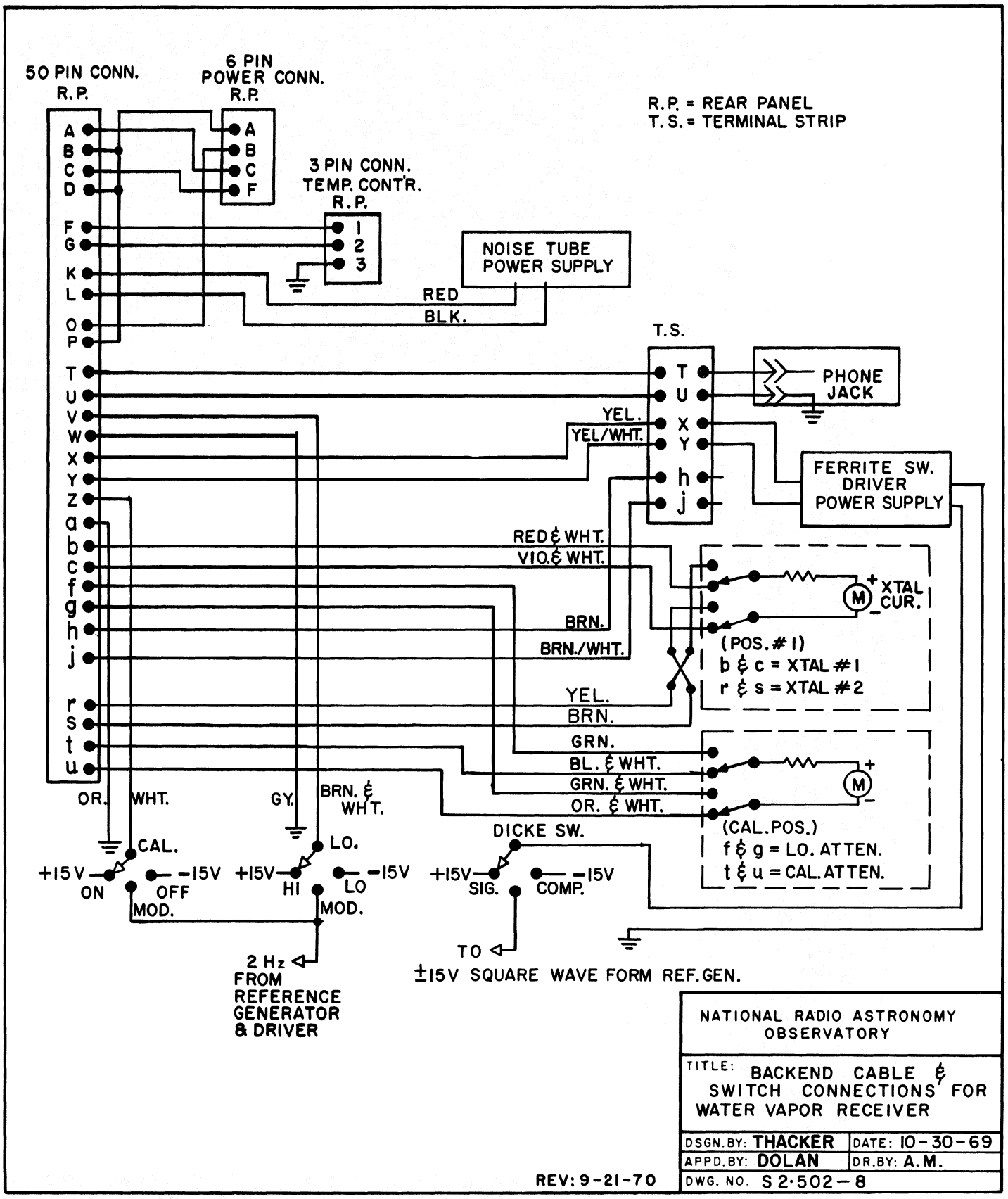
50 PIN CONN.
R.P.
6 PIN
POWER CONN.
R.P.
R.P. = REAR PANEL
T.S. = TERMINAL STRIP
3 PIN CONN.
TEMP. CONT'R.
R.P.
NOISE TUBE
POWER SUPPLY
RED
BLK.
T.S.
PHONE
JACK
YEL.
YEL/WHT.
FERRITE SW.
DRIVER
POWER SUPPLY
RED & WHT.
VIO. & WHT.
XTAL
CUR.
BRN.
BRN./WHT.
(POS. # 1)
b & c = XTAL #1
r & s = XTAL #2
YEL.
BRN.
GRN.
BL. & WHT.
GRN. & WHT.
OR. & WHT.
(CAL. POS.)
f & g = LO. ATTEN.
t & u = CAL. ATTEN.
OR.
WHT.
GY.
BRN. & WHT.
CAL.
LO.
DICKE SW.
+15V
ON
OFF
-15V
MOD.
HI
LO
SIG.
COMP.
2 Hz
FROM
REFERENCE
GENERATOR
& DRIVER
TO
±15V SQUARE WAVE FORM REF. GEN.
NATIONAL RADIO ASTRONOMY
OBSERVATORY
TITLE: BACKEND CABLE & SWITCH CONNECTIONS FOR WATER VAPOR RECEIVER
DSGN. BY: THACKER
DATE: 10-30-69
APPD. BY: DOLAN
DR. BY: A.M.
DWG. NO. S 2·502-8
REV: 9-21-70

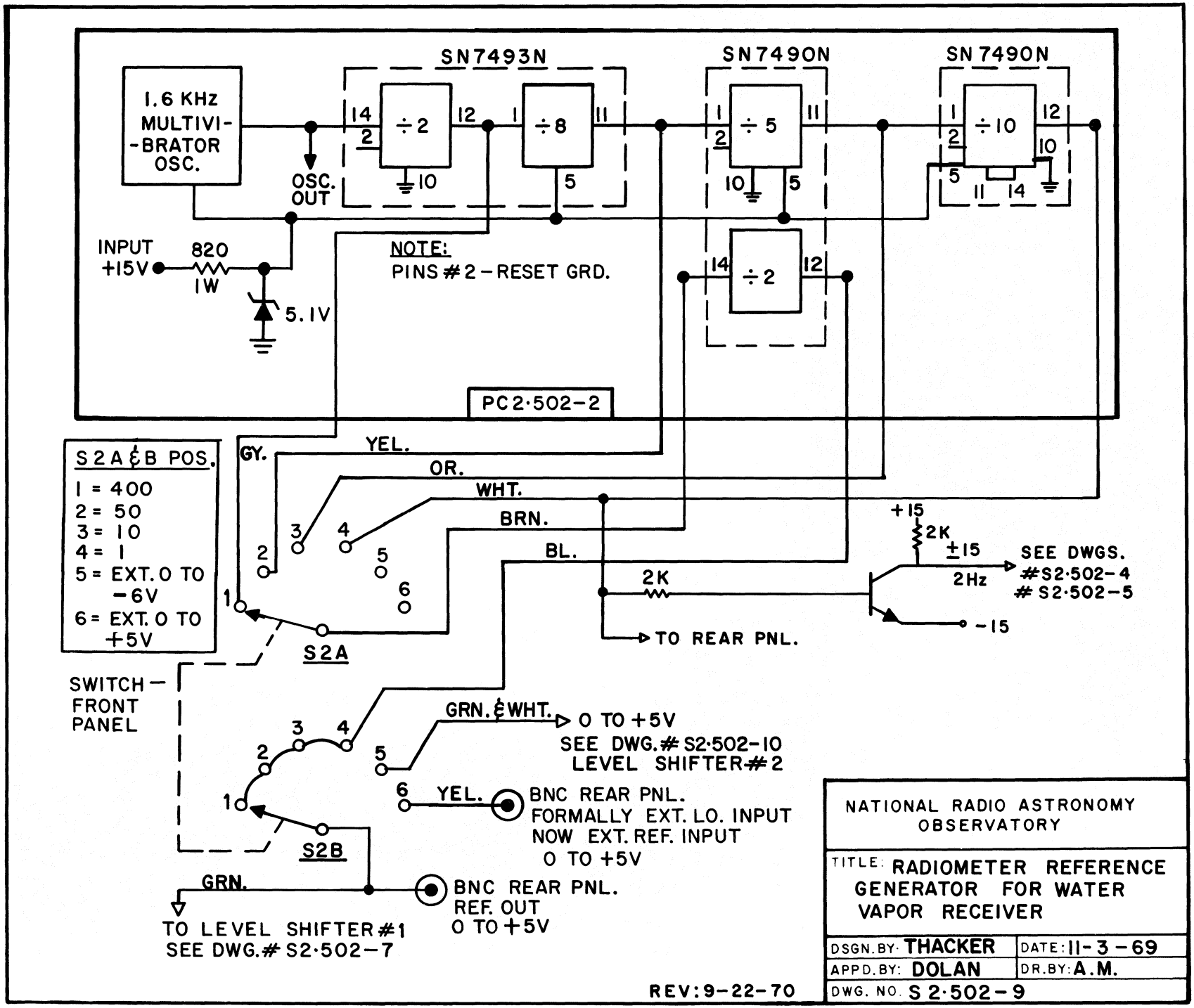
SN7493N
SN7490N
SN7490N
1.6 KHz MULTIVI--BRATOR OSC.
OSC. OUT
÷2
÷8
÷5
÷10
÷2
NOTE:
PINS #2 – RESET GRD.
INPUT +15V
820 1W
5.1V
PC2·502-2
S2A & B POS.
1 = 400
2 = 50
3 = 10
4 = 1
5 = EXT. 0 TO −6V
6 = EXT. 0 TO +5V
GY.
YEL.
OR.
WHT.
BRN.
BL.
S2A
SWITCH – FRONT PANEL
S2B
+15
2K
±15
2Hz
SEE DWGS. #S2·502-4 #S2·502-5
−15
2K
TO REAR PNL.
GRN. & WHT.
0 TO +5V
SEE DWG. # S2·502-10 LEVEL SHIFTER #2
YEL.
BNC REAR PNL. FORMALLY EXT. LO. INPUT NOW EXT. REF. INPUT 0 TO +5V
GRN.
BNC REAR PNL. REF. OUT 0 TO +5V
TO LEVEL SHIFTER #1 SEE DWG. # S2·502-7
REV: 9-22-70
NATIONAL RADIO ASTRONOMY OBSERVATORY
TITLE: RADIOMETER REFERENCE GENERATOR FOR WATER VAPOR RECEIVER
DSGN. BY: THACKER
DATE: 11-3-69
APPD. BY: DOLAN
DR. BY: A.M.
DWG. NO. S 2·502-9

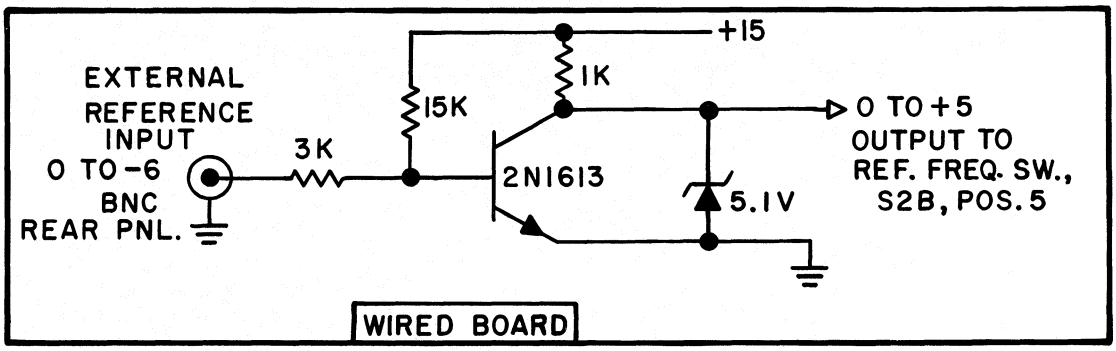

LEVEL SHIFTER #2

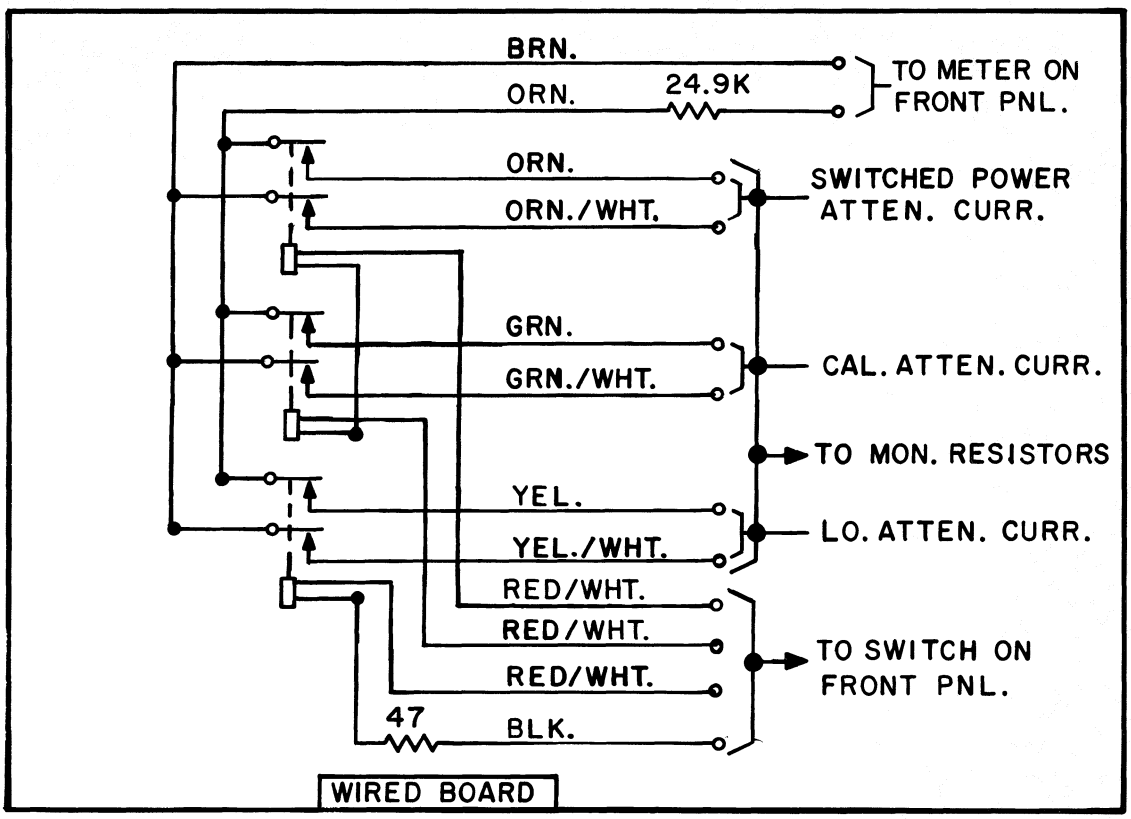

ATTEN. CURR. MON. CKT.

NATIONAL RADIO ASTRONOMY OBSERVATORY	
TITLE: LEVEL SHIFTER #2 & ATTEN. CURR. MON. CKT. FOR WATER VAPOR RECEIVER	
DSGN. BY: THACKER	DATE: 11-6-69
APPD. BY: DOLAN	DR. BY: A. M.
DWG. NO. S 2·502-10	

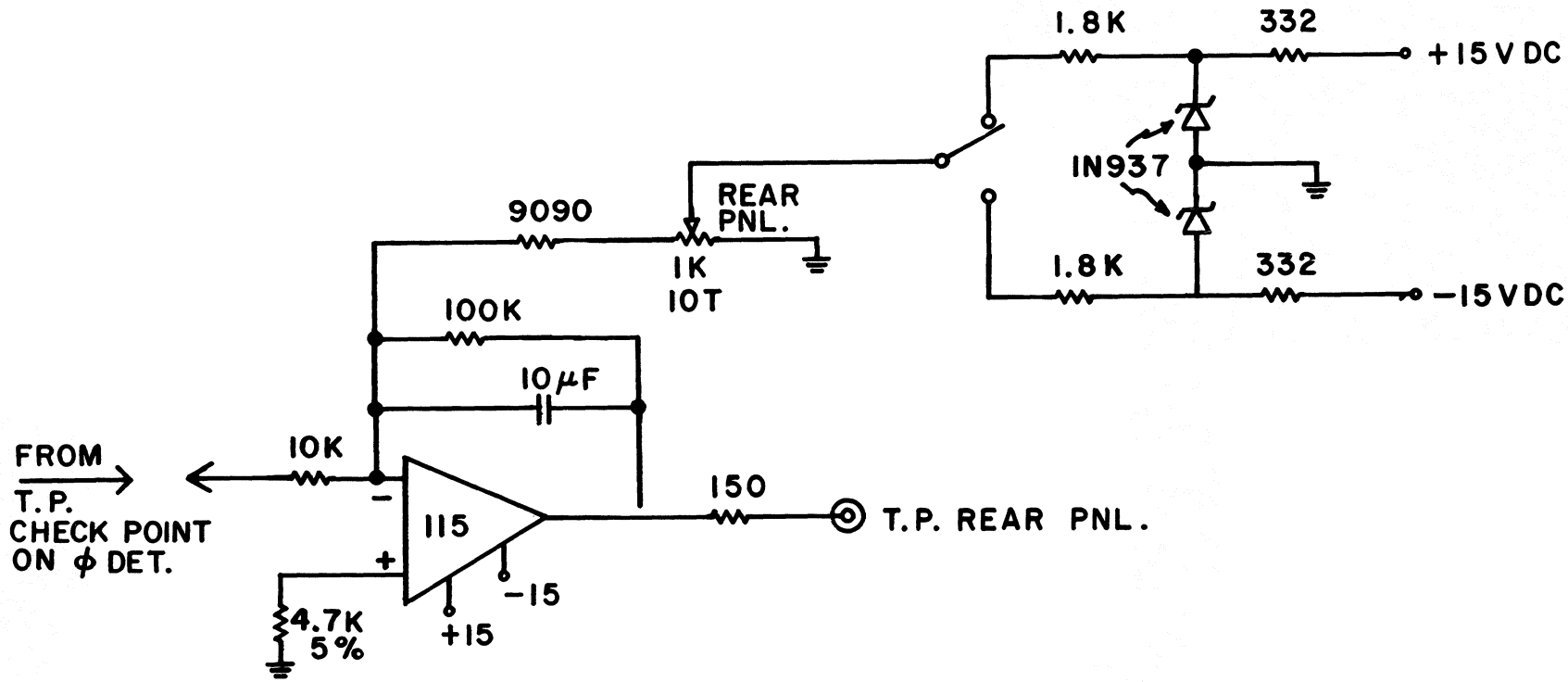

RESISTORS = 1% OR AS INDICATED

TOTAL POWER BACK-OFF AND X·10 CKT.

NATIONAL RADIO ASTRONOMY OBSERVATORY	
TITLE: WATER VAPOR RADIOMETER	
DSGN. BY: J. DOLAN	DATE: 9-22-70
APPD. BY:	DR. BY:
DWG. NO. S 2·502 - 12	

6218

6216
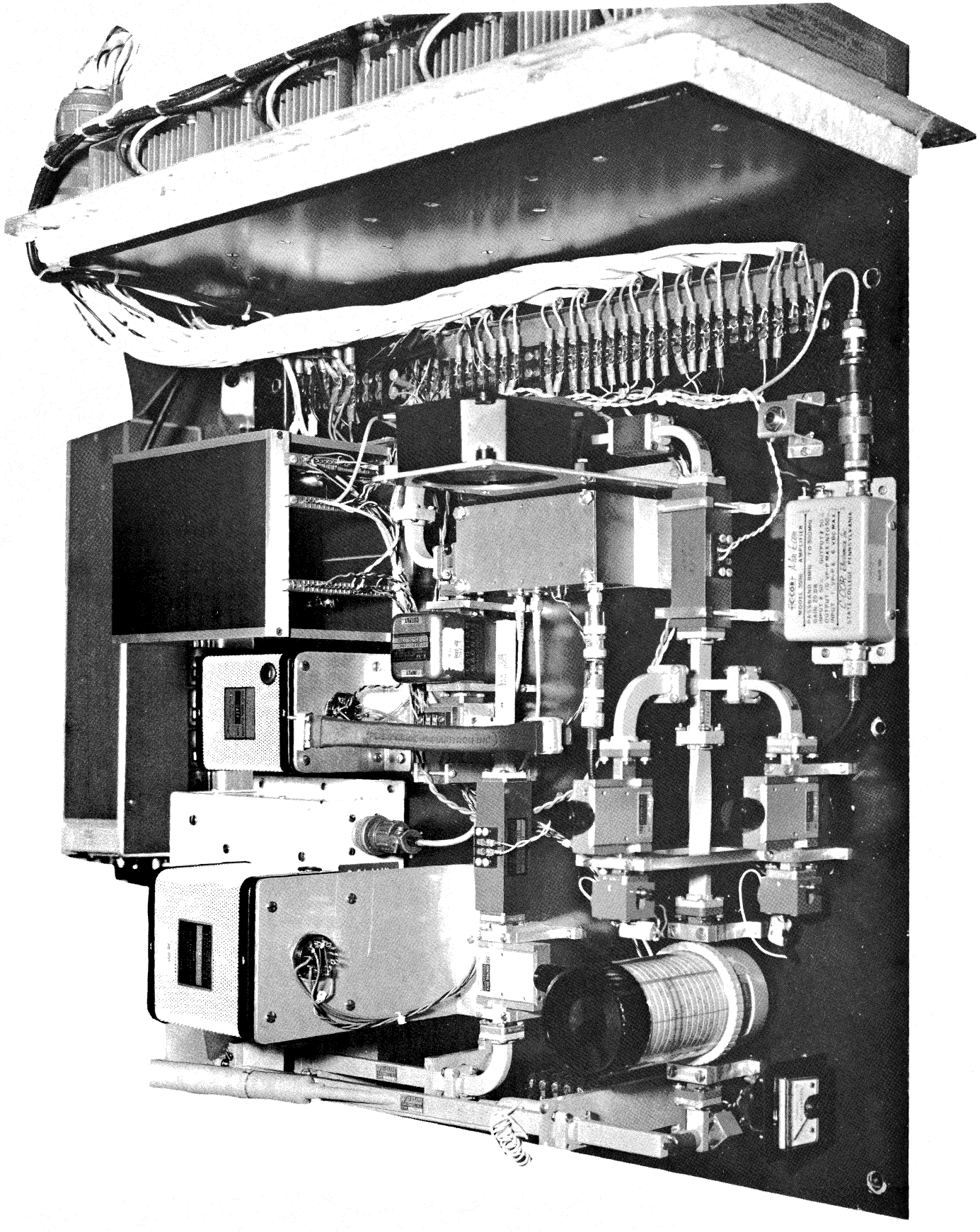
6217