NATIONAL RADIO ASTRONOMY OBSERVATORY

Electronics Division Internal Report No. 61

FREQUENCY SWEEPER

John Payne

September 1967

NUMBER OF COPIES: 100

FREQUENCY SWEEPER

John Payne

1. General Description

The sweeper described in this note has been designed to be suitable for installation in a front-end box for the purpose of checking the bandpass of a complete receiving system. The prototype sweeper was designed to sweep the range 1365-1455 Mc/s and the output is flat to within ± 0.1 dB over this range. Two frequency markers are provided and also a facility for remotely turning the sweeper on.

2. Description of Operation

The VCO used in the sweeper is a Frequency Sources Type FS-6. This unit requires a +24 V supply at 75 mA and a tuning voltage of -14 V to -24 V for the desired frequency range. The circuitry has been designed so that any other Frequency Sources VCO may be used to give different frequency coverage.

A simple unijunction relaxation oscillator is used to generate the ramp for sweeping the VCO. The amplitude and DC level of the sweep may be adjusted independently. The oscillator may free-run or be synchronized to the line frequency.

The RF output from the VCO is split with a 3 dB hybrid, one output of which is detected and used for leveling purposes. The leveled output may be adjusted up to a maximum value of 20 mW. The leveling loop is a simple integrating loop, the attenuating element being a HP 3550 diode attenuator.

The markers are generated by comparing the sweep voltage with a fixed voltage and when the two are equal a spike is injected into the leveling loop to give a momentary decrease in power.

3. Mechanical Construction

The form of construction used is shown in the photographs. A printed circuit board is used for the sweep circuits, the marker generator and leveling loop. The size of the sweeper is 4" x 5" x 10".

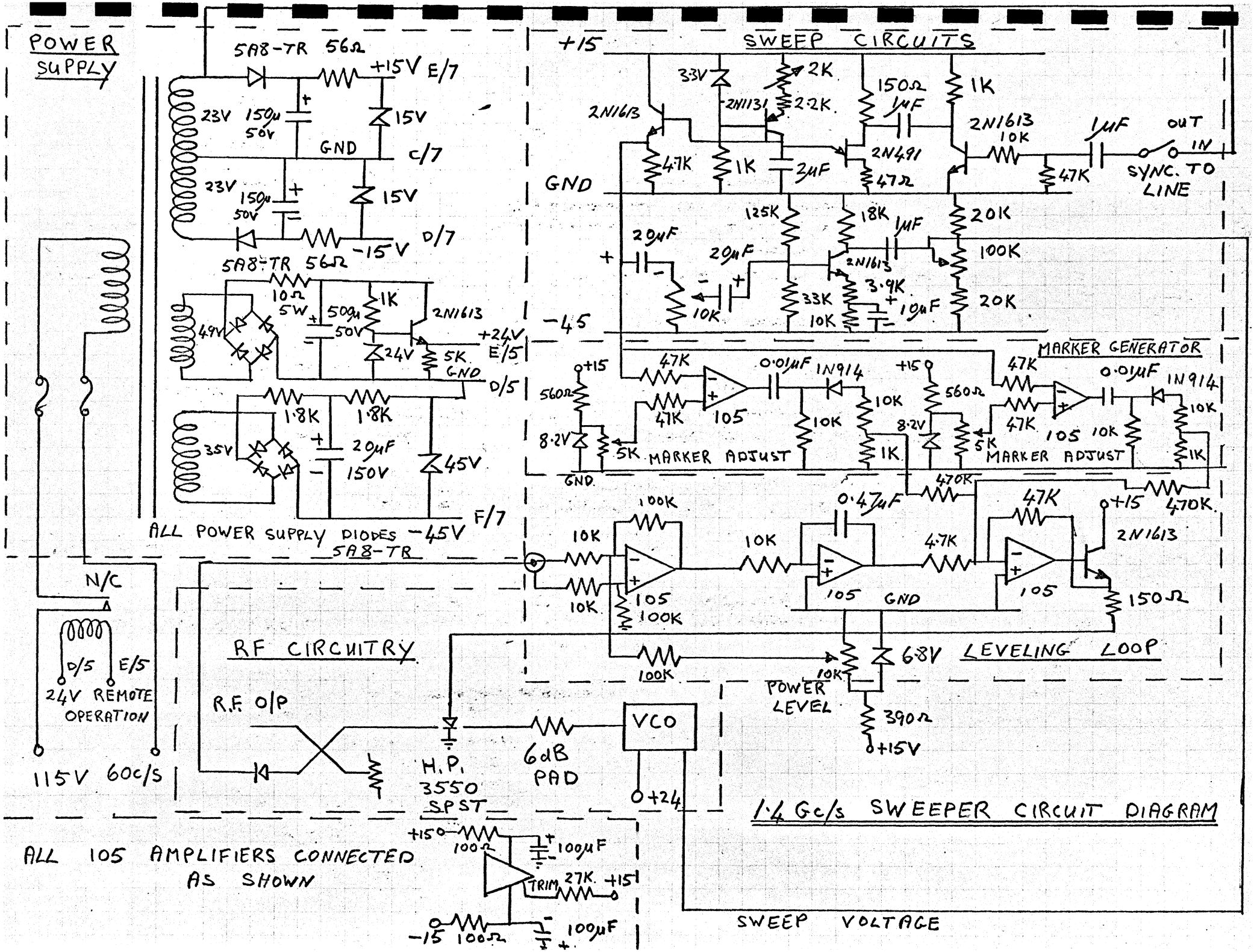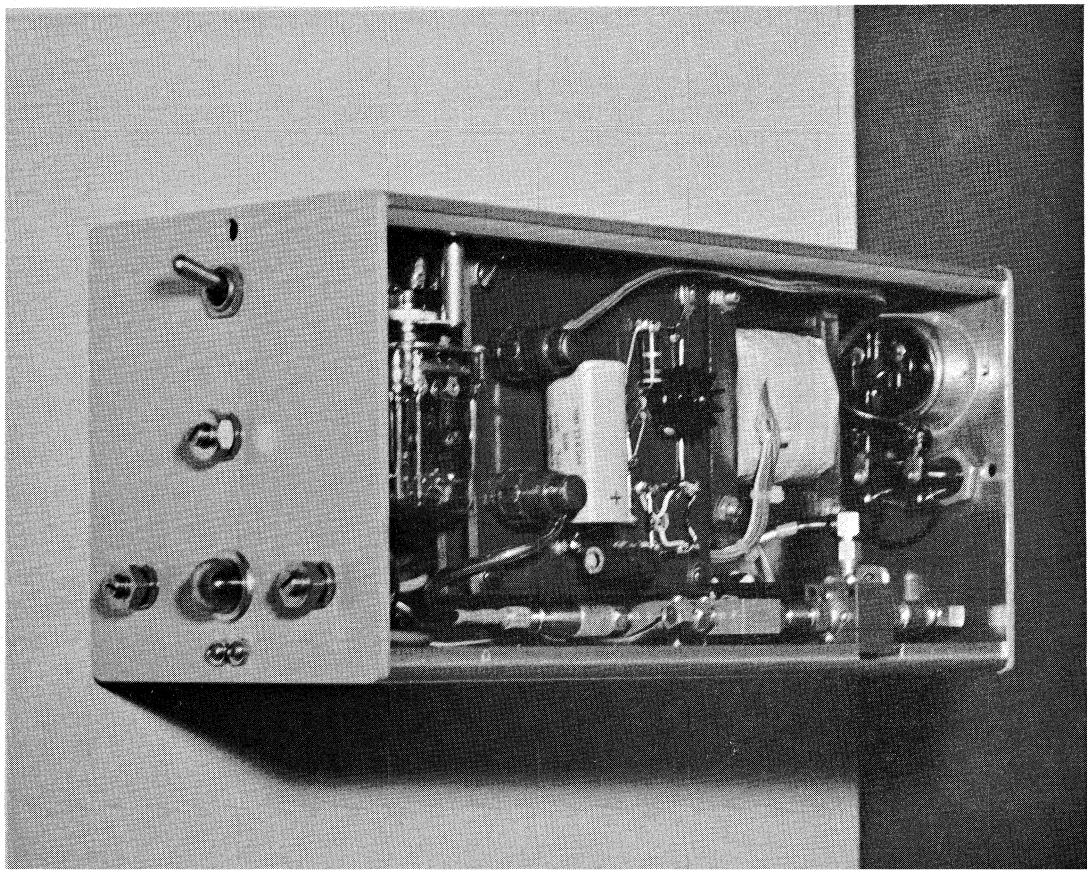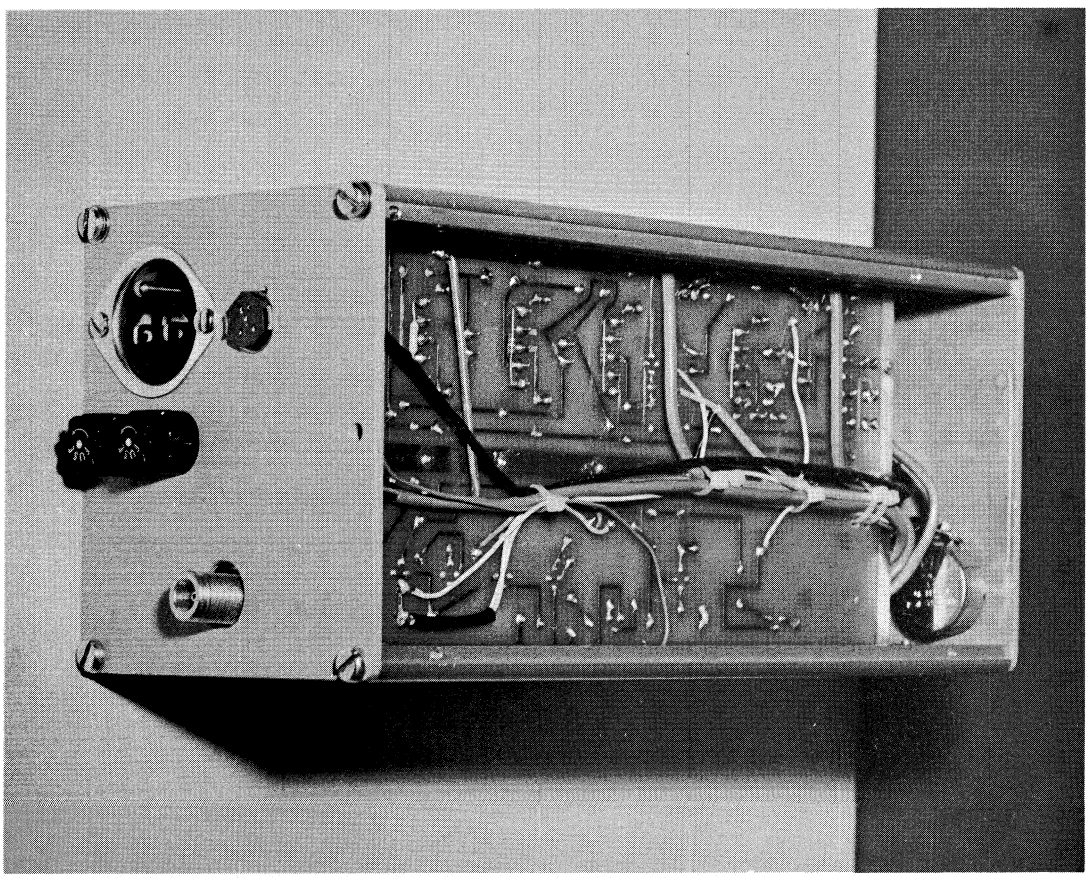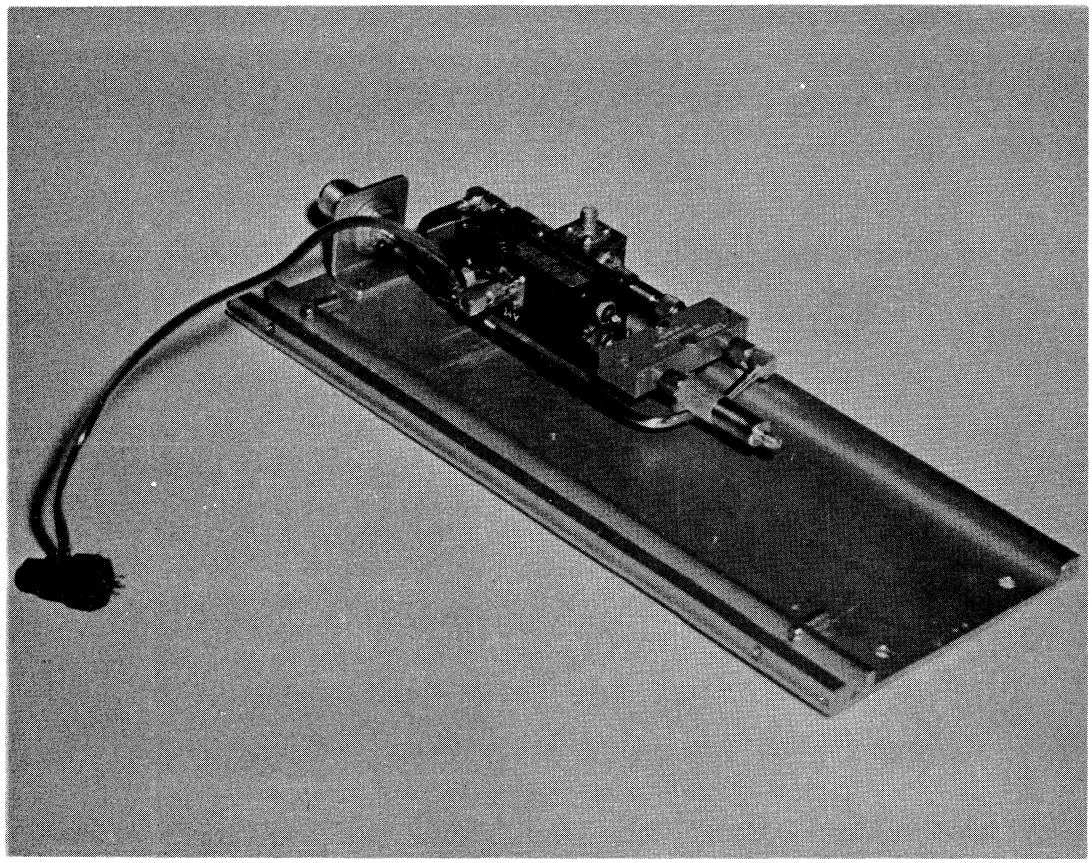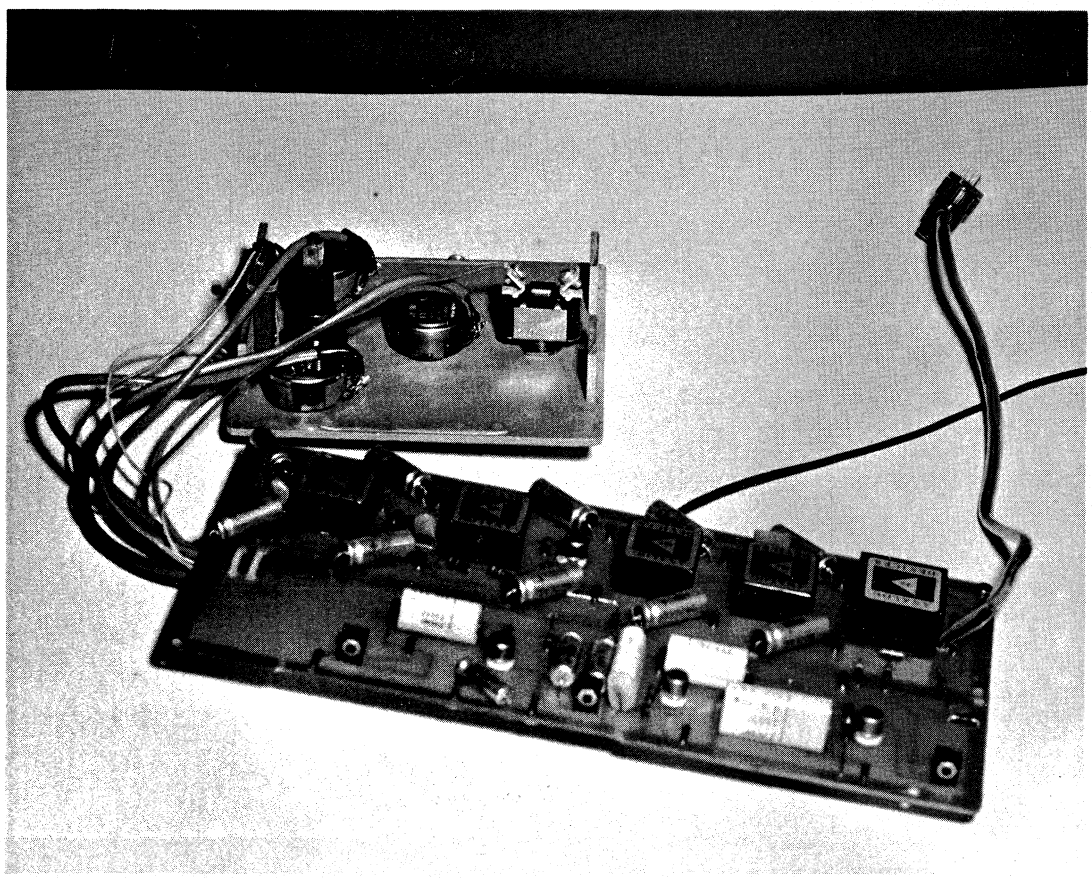
POWER SUPPLY
5A8-TR 56Ω
+15V E/7
23V 150μ 50V
15V
GND
C/7
23V 150μ 50V
15V
-15V D/7
5A8-TR 56Ω
10Ω 5W
500μ 50V
1K
2N1613
49V
24V
5K
+24V E/5
GND
D/5
1.8K
1.8K
35V
20μF 150V
45V
F/7
ALL POWER SUPPLY DIODES -45V
5A8-TR
N/C
D/5
E/5
24V REMOTE OPERATION
115V 60c/s
SWEEP CIRCUITS
+15
3.3V
2K
2.2K
2N1131
2N1613
150Ω
1μF
1K
2N1613
10K
1μF
OUT
IN
SYNC. TO LINE
4.7K
1K
2μF
2N491
47Ω
47K
GND
125K
18K
1μF
20K
20μF
20μF
100K
2N1613
3.9K
10μF
33K
10K
10K
20K
-45
MARKER GENERATOR
+15
47K
0.01μF
1N914
560Ω
47K
105
10K
10K
8.2V
5K
MARKER ADJUST
1K
GND
+15
560Ω
47K
0.01μF
1N914
10K
8.2V
5K
47K
105
10K
MARKER ADJUST
1K
470K
470K
100K
0.47μF
47K
+15
2N1613
10K
10K
4.7K
10K
105
105
105
GND
150Ω
100K
6.8V
LEVELING LOOP
100K
10K
POWER LEVEL
390Ω
+15V
RF CIRCUITRY
R.F. O/P
H.P. 3550 SPST
6dB PAD
VCO
+24
1.4 Gc/s SWEEPER CIRCUIT DIAGRAM
ALL 105 AMPLIFIERS CONNECTED AS SHOWN
+15
100Ω
100μF
TRIM
27K
+15
-15
100Ω
100μF
SWEEP VOLTAGE