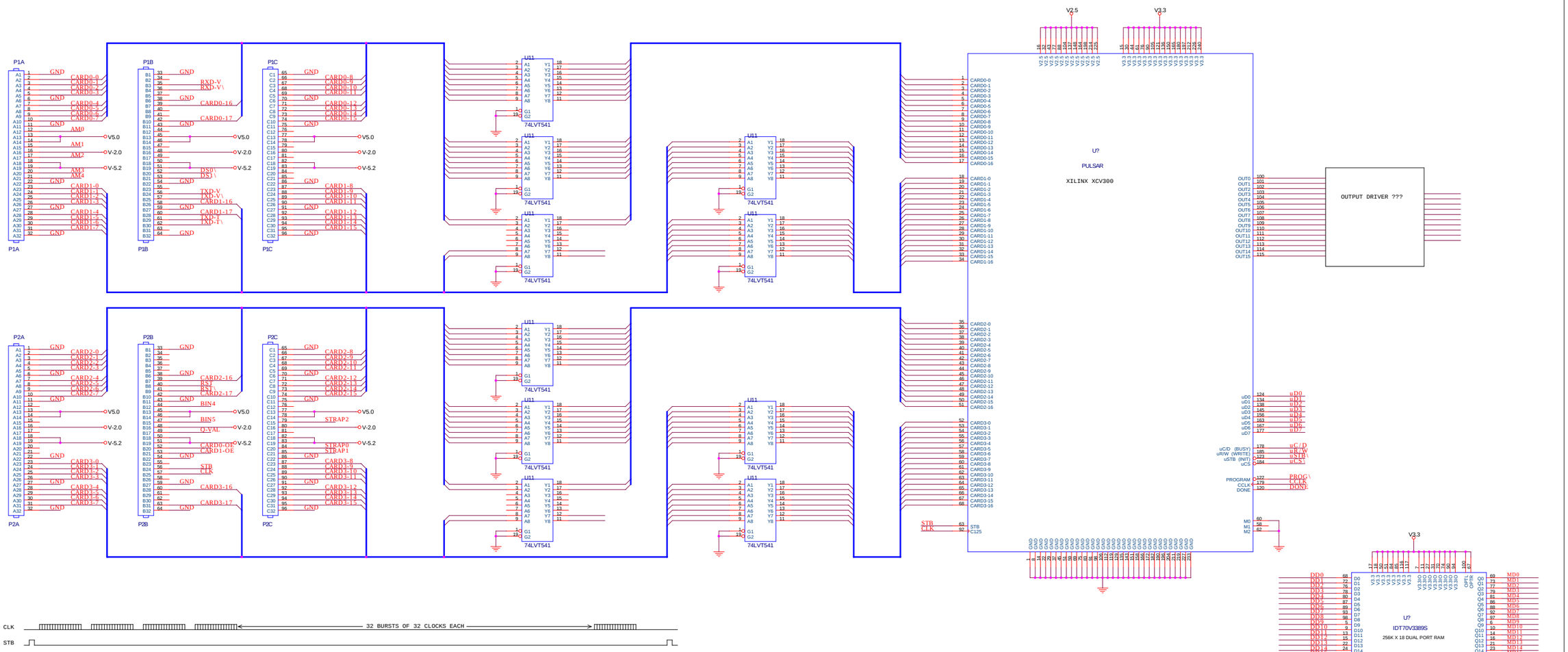

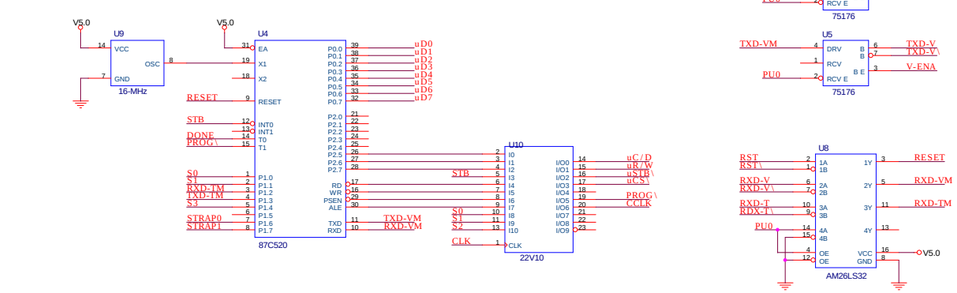

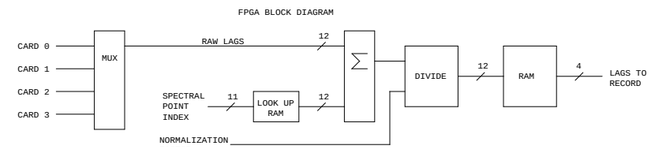

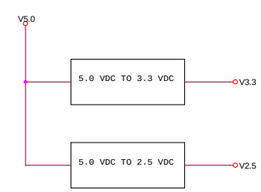

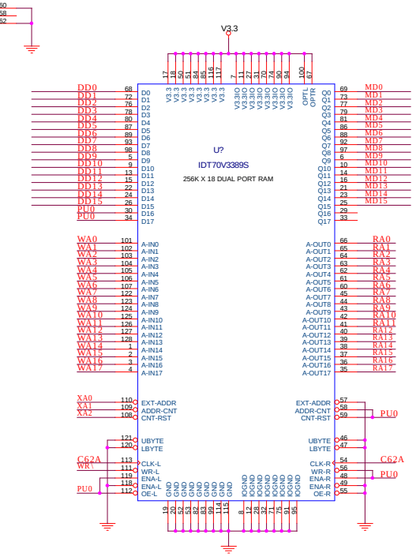

GBT PULSAR SPIGOT CARD

Title	<Title>	
Size D	Document Number <Doc>	Rev <RevCode>
Date: Monday, December 18, 2000	Sheet 1 of 1	