Robert C. Byrd Green Bank Telesscope
NRAO Green Bank

B. Mason, K. O'Neil, J. Brandt

17th August 2007

GBT SOFTWARE PROJECT NOTE 27.1

Ka Rx Fits Spec

HTML version Available[1]

Contents

1 Overview **2**

2 Required keywords **2**

3 Ka band receiver keywords **2**

4 Exensions **3**

Abstract

This documents described the Ka receiver FITS file.

[1] http://wiki.gb.nrao.edu/bin/view/Projects/KaRxFitsSpec

1 Overview

The Ka band receiver will record one FITS file for every scan. This FITS file will be written in the directory named after the receiver which is also currently used by the measurements manager to write the calibration FITS file (which is only done once per observation, not once per scan). These two types of files will be distinguished by their contents. Since the calibration FITS file has a bogus date and time (date is the date of the lab calibration measurement provided by the engineers; times are all zeros) we are confident the files won't overwrite each other. The name of the receiver FITS file should be generated as per the current convention as to date and time (eg, 2004_07_06_04:23:12.fits).

2 Required keywords

The required keywords will be those explained in GBT Software Project note 4.3.2, "Device and Log FITS Files for the GBT", to be found at: http://wwwlocal.gb.nrao.edu/GBT/MC/doc/dataproc/gbtFits/gbtFits/node2.html

The example given in this document (slightly modified here in the INSTRUME keyword) is:

```
SIMPLE  =                    T / file does conform to FITS standard
BITPIX  =                    8 / number of bits per data pixel
NAXIS   =                    0 / number of data axes
EXTEND  =                    T / FITS dataset may contain extensions
ORIGIN  = 'NRAO Green Bank'    /
INSTRUME= 'Rcvr26_40'       / device or program of origin
GBTMCVER= '3.3.0   '           / telescope control software release
FITSVER = '1.1     '           / FITS definition version for this device
DATEBLD = 'Thu Jun 21 18:46:25 GMT 2001' / time program was linked
SIMULATE=                    0 / Is the instrument in simulate mode?
DATE-OBS= '2001-11-17T15:54:13' / Manager parameter startTime
TIMESYS = 'UTC     '           / time scale specification for DATE-OBS
TELESCOP= 'NRAO_GBT'           / Green Bank Telescope (Robert C. Byrd 100m)
OBJECT  = '1950+34 '           / Manager parameter source
PROJID  = 'test    '           / Manager parameter projectId
OBSID   = 'map     '           / Manager parameter scanId
SCAN    =                  543 / Manager parameter scanNumber
 :
 :
(other application-specific keywords)
 :
 :
END
```

As indicated in this example, the name of the INSTRUME for the Ka band receiver should be appropriate given whatever the standard naming convention is – "Rcvr26_40". This should be the same as the name of the subdirectory where this FITS file is found.

3 Ka band receiver keywords

The Ka band receiver manager will, in addition, record the following keywords.

- PHASSRC and CALSRC: these keywords will have a string value which denotes the origin of the phase [cal] switching signal. Options are: Local control (value "'LOCAL'), the MCB crate (value 'MCB'), the

CCB (value 'Ccb'), the system-wide switching signal distribution (value 'EXT'), or the Zpectrometer (value 'ZPEC'). These parameters are controled by the boxes labeled "Phase Ctrl" and "Cal Ctrl" on the Ka band CLEO screen.

- LCALTRAK and RCALTRAK: these keywords will have boolean values denoting whether the individual calibration noise diodes were tracking the CAL signal specified by CALSRC (value of TRUE=T) or not tracking it (value of FALSE=F). These parameters are controled by the boxes labeled "External Track" on the Ka band CLEO screen.
- D1SRTRAK, S1SRTRAK, D2SRTRAK, and S2SRTRAK: these keywords will have boolean values which denote whether the four individual phase switches (D1, D1, D2, and S2) were tracking the Phase (beam-switch) signal specified by PHASSRC (value of TRUE=T) or not tracking it (value of FALSE=F). These parameters are controled by the boxes labeled "Sig/Ref Track" on the Ka band CLEO screen.
- D1BIAS, S1BIAS, D2BIAS, and S2BIAS: these keywords will have boolean values which denote whether the four HEMTs (D1, S2, D2, S2) were on (T) or off (F). These parameters are controled by the boxes labeled "Bias" on the Ka band CLEO screen.

As of FITSVER 2.2:

- D1BYSW, S1BYSW, D2BYSW, S2BYSW: these keywords indicate the state of the new hybrid bypass switches. A value of "T" indicates the switch is active, i.e the hybrid is being bypassed. Although four keywords exist, only D1BYSW and S1BYSW are implemented in the hardware at this date (Sep 06).

The values associated with these keywords should denote the parameter values at the start of the scan, which by assumption will be constant within a scan.

To help clarify the mappings I've marked up a screenshot of the Ka band CLEO screen. (See below.)

4 Exensions

The Ka band receiver will have no extensions– the header contains all the information that is needed.

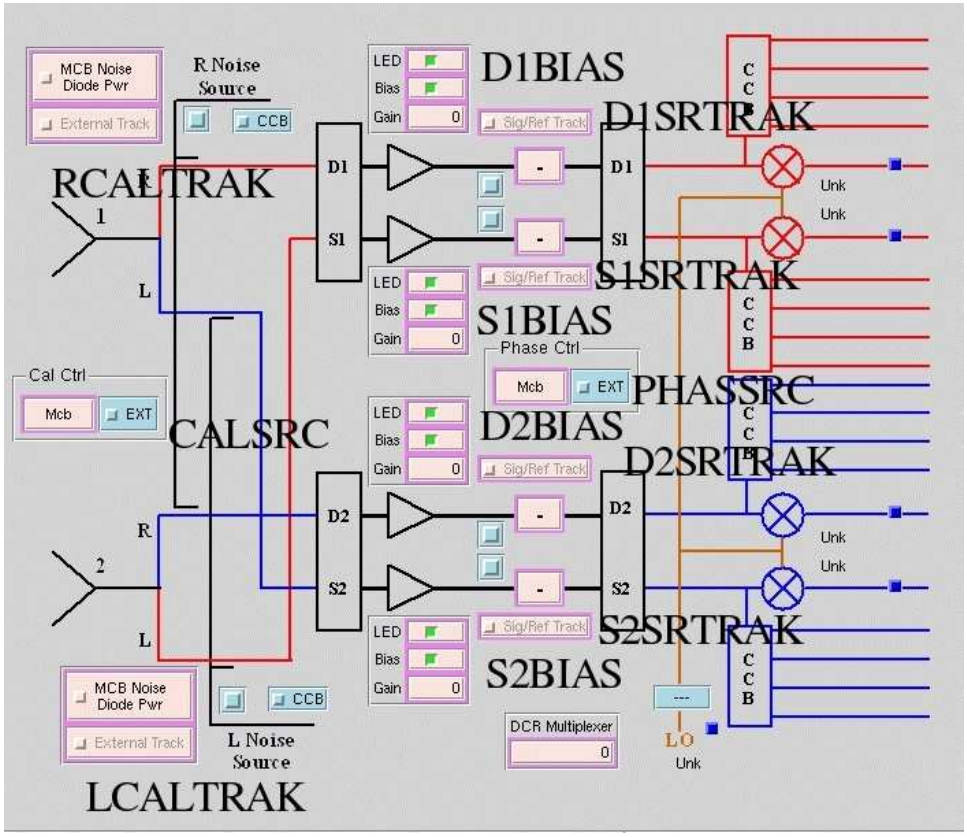
MCB Noise Diode Pwr
External Track
R Noise Source
CCB
RCALTRAK
1
L
Cal Ctrl
Mcb
EXT
CALSRC
R
2
L
MCB Noise Diode Pwr
External Track
CCB
L Noise Source
LCALTRAK
D1
S1
D2
S2
LED
Bias
Gain
0
D1BIAS
Sig/Ref Track
D1SRTRAK
S1SRTRAK
S1BIAS
Phase Ctrl
Mcb
EXT
PHASSRC
D2BIAS
D2SRTRAK
S2SRTRAK
S2BIAS
DCR Multiplexer
0
LO
Unk
C
C
B
Unk
Unk